Flush Transverse Partition - Corner Girt Connections - Deep Column Aligned and/or Non-Aligned Partition Girt with Flush Sidewall Girt

Page CP04103
Date Sep '12 Rev. 01

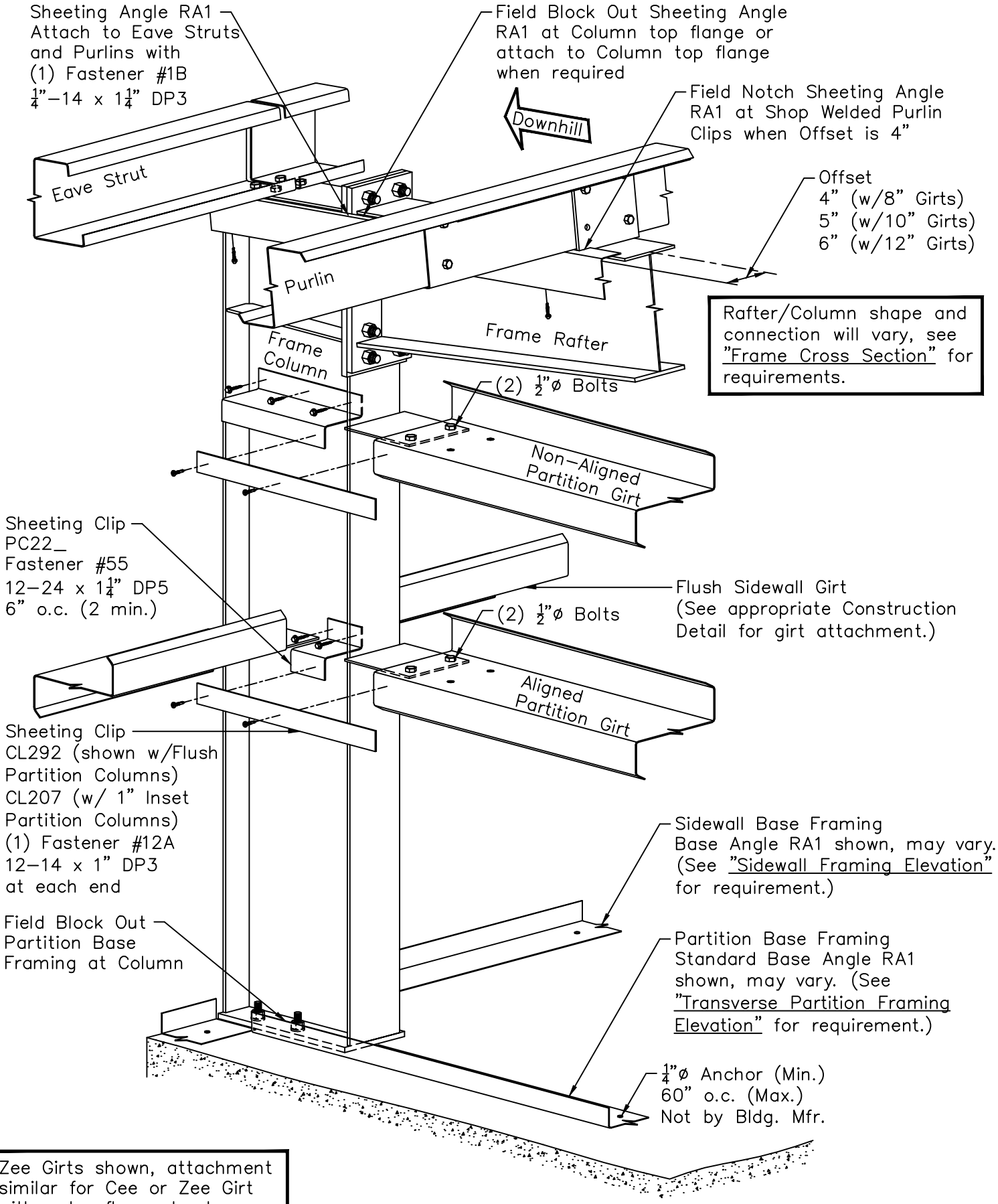

Zee Girts shown, attachment similar for Cee or Zee Girt with outer flange toed up.