# Corner Column - Inset Column
# Sidewall Girt Attaches to Inner Flange with Bolted Clip
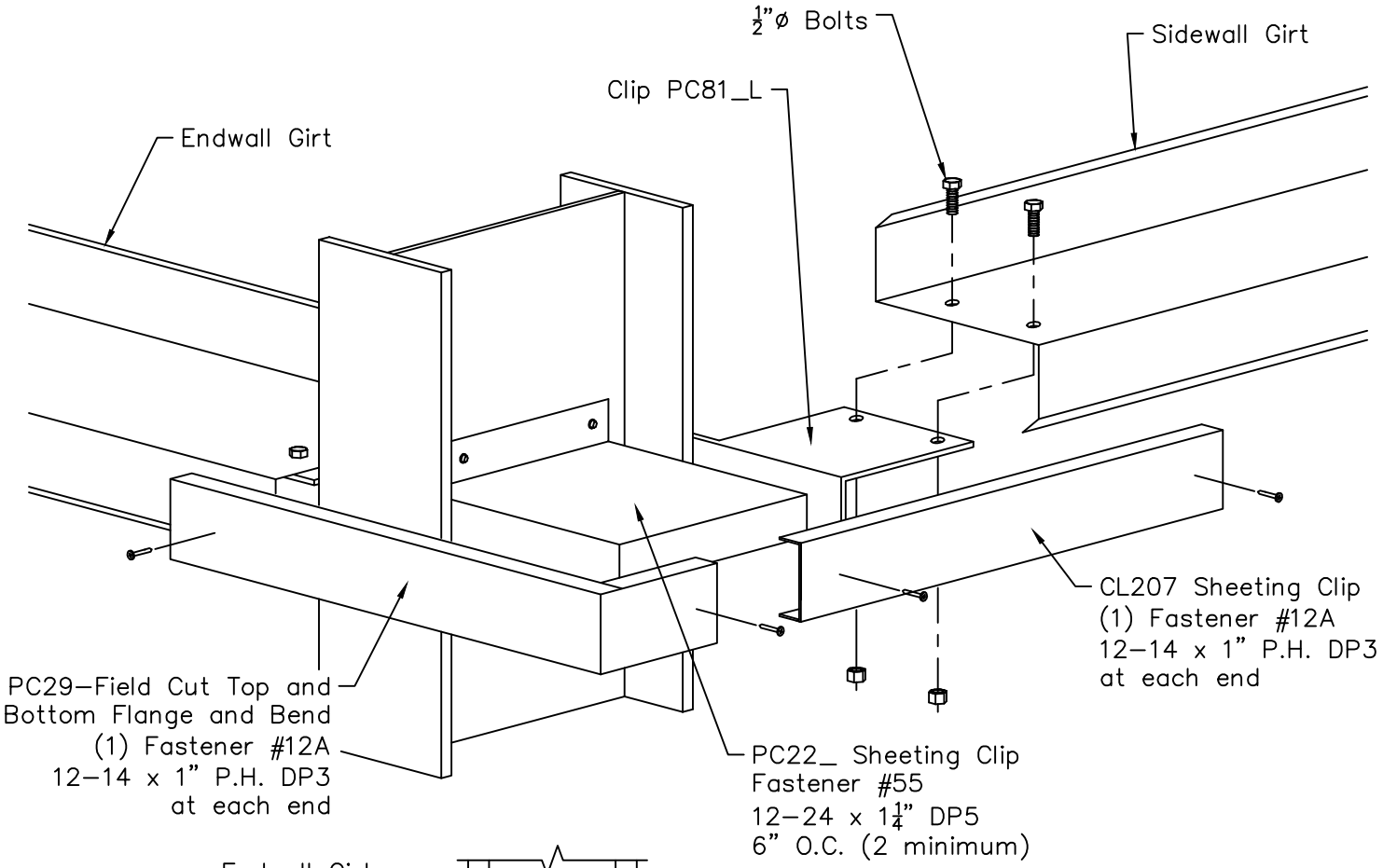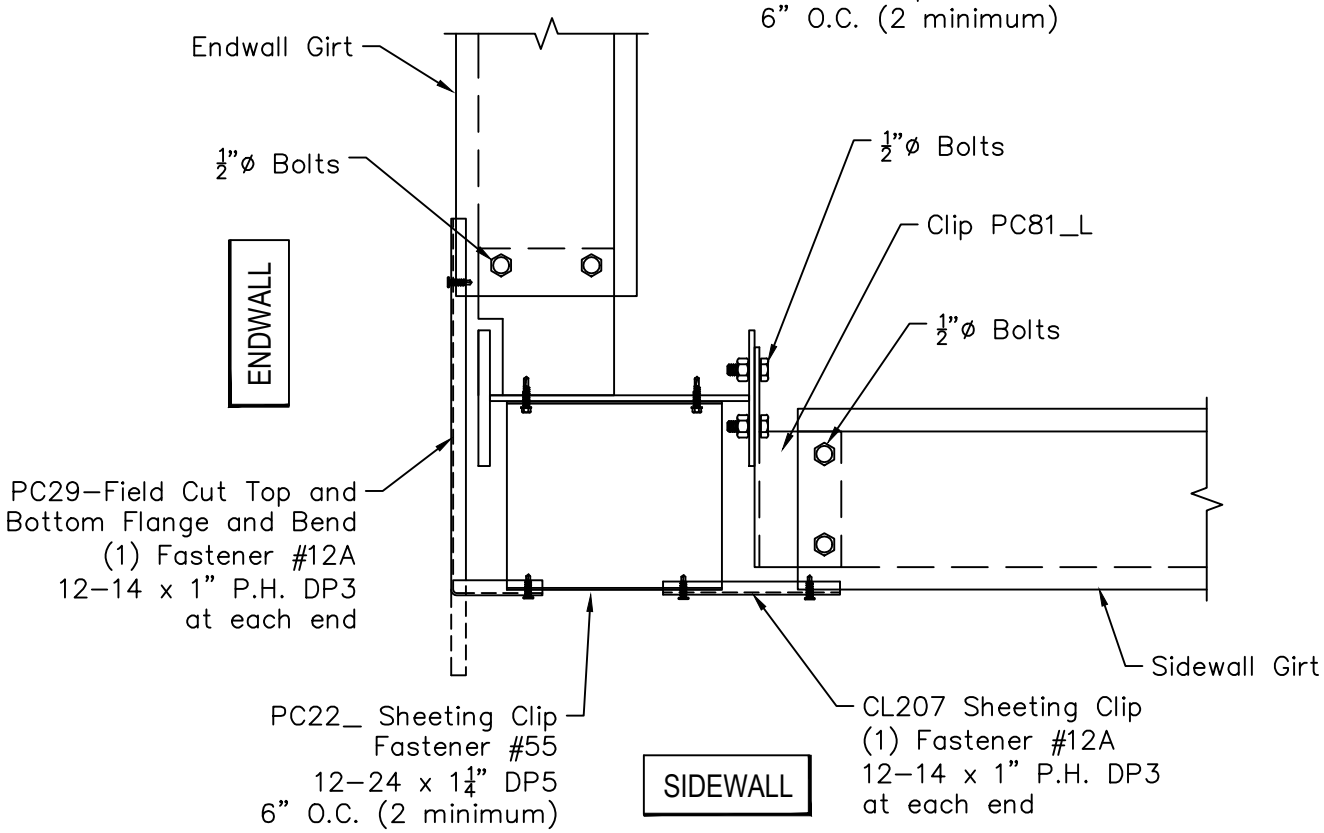
| Page | Date | Rev. |
|---|---|---|
| EF03047 | Apr '11 | 00 |